Rectangular Prisms (H)

Instructions: Find the volume and surface area of the rectangular prisms.

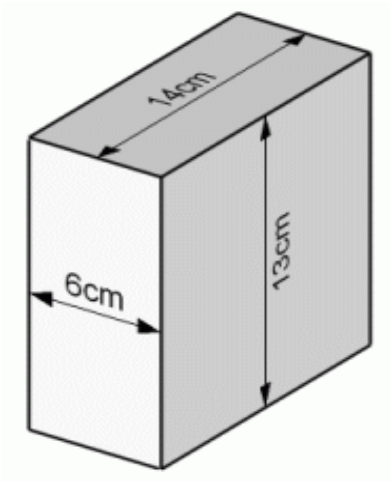

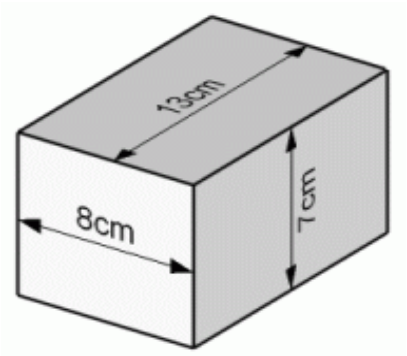

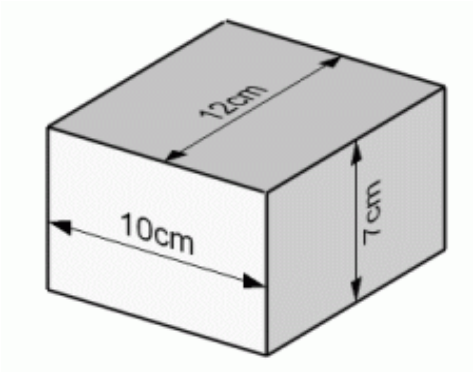

Rectangular Prisms (H) Answers

Instructions: Find the volume and surface area of the rectangular prisms.

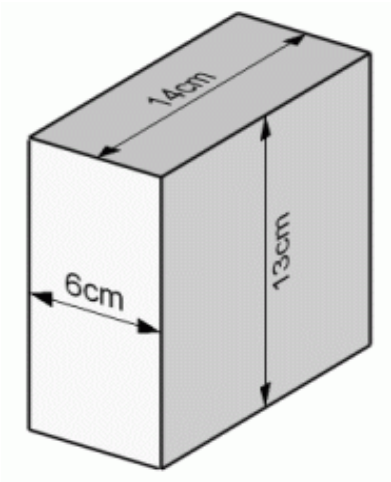

L = 6 cm
W = 14 cm
H = 13 cm
SA = (6×14×2)+(14×13×2)+(6×13×2)
SA = 688 cm²
V = 6×14×13
V = 1092 cm³

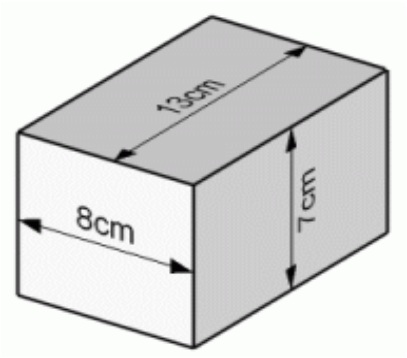

L = 8 cm
W = 13 cm
H = 7 cm
SA = (8×13×2)+(13×7×2)+(8×7×2)
SA = 502 cm²
V = 8×13×7
V = 728 cm³

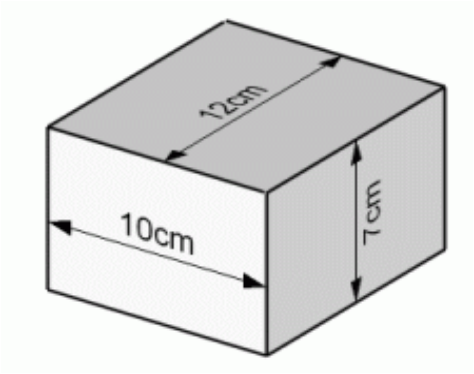

L = 10 cm
W = 12 cm
H = 7 cm
SA = (10×12×2)+(12×7×2)+(10×7×2)
SA = 548 cm²
V = 10×12×7
V = 840 cm³

Free Math Worksheets at http://www.math-drills.com