Volume and surface area of prisms (A)

Find the volume and surface area of each prism.

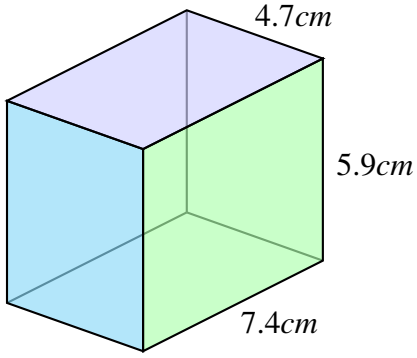

V: _____

SA: _____

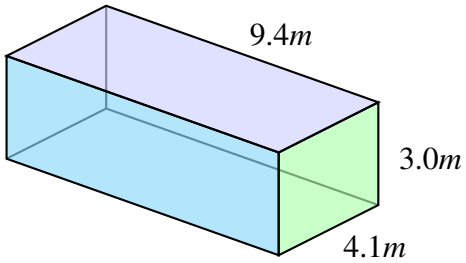

V: _____

SA: _____

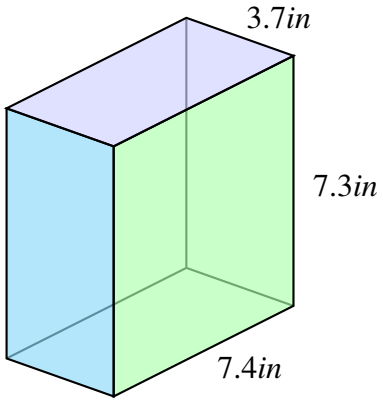

V: _____

SA: _____

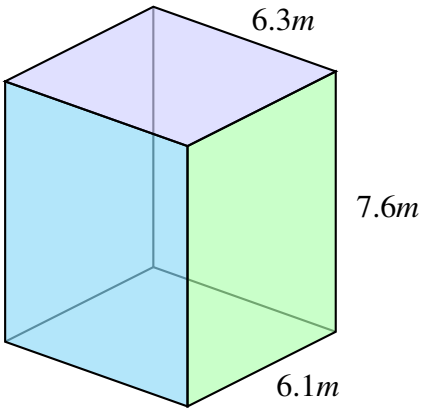

V: _____

SA: _____

Volume and surface area of prisms (A) Answers

Find the volume and surface area of each prism.

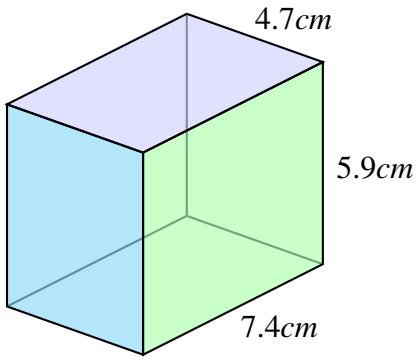

V: 7.4cm x 4.7 x 5.9cm = 205.202cm^3

SA: 2 x (34.78 + 27.73 + 43.66)cm = 212.34cm^2

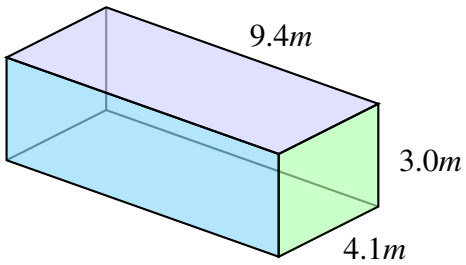

V: 4.1m x 9.4 x 3.0m = 115.62m^3

SA: 2 x (38.54 + 28.2 + 12.3)m = 158.08m^2

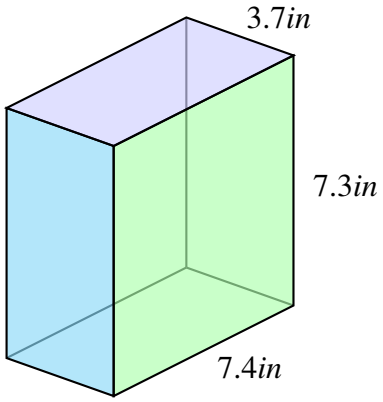

V: 7.4in x 3.7 x 7.3in = 199.874in^3

SA: 2 x (27.38 + 27.01 + 54.02)in = 216.82in^2

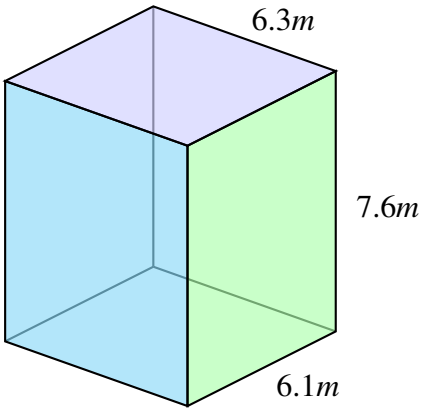

V: 6.1m x 6.3 x 7.6m = 292.068m^3

SA: 2 x (38.43 + 47.88 + 46.36)m = 265.34m^2

Volume and surface area of prisms (B)

Find the volume and surface area of each prism.

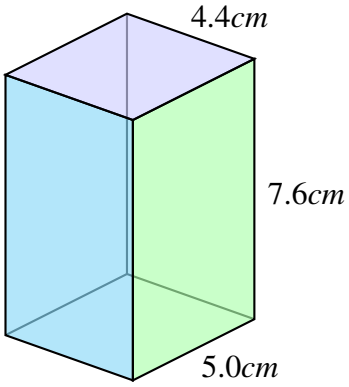

V: _____

SA: _____

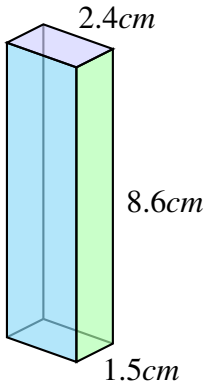

V: _____

SA: _____

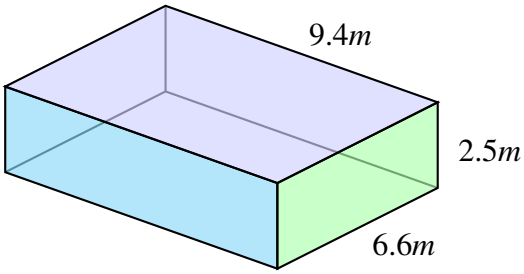

V: _____

SA: _____

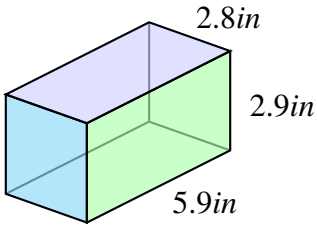

V: _____

SA: _____

Volume and surface area of prisms (B) Answers

Find the volume and surface area of each prism.

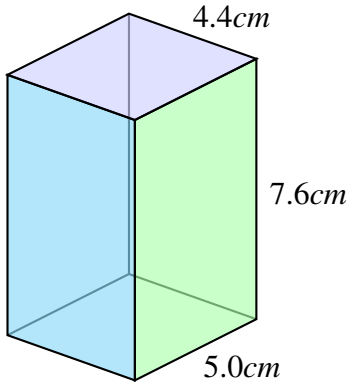

V: 5.0*cm* x 4.4 x 7.6*cm* = 167.2cm^3

SA: 2 x (22.0 + 33.44 + 38.0)*cm* = 186.88cm^2

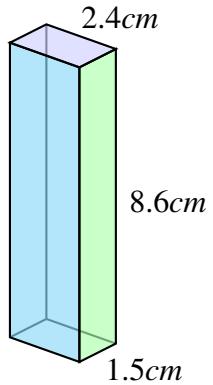

V: 1.5*cm* x 2.4 x 8.6*cm* = 30.96cm^3

SA: 2 x (3.6 + 20.64 + 12.9)*cm* = 74.28cm^2

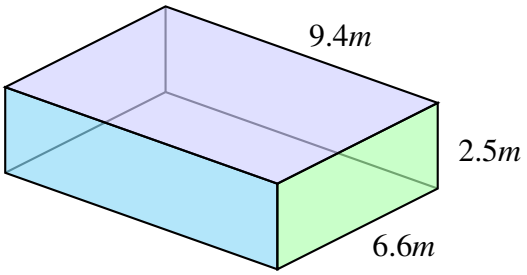

V: 6.6*m* x 9.4 x 2.5*m* = 155.1m^3

SA: 2 x (62.04 + 23.5 + 16.5)*m* = 204.08m^2

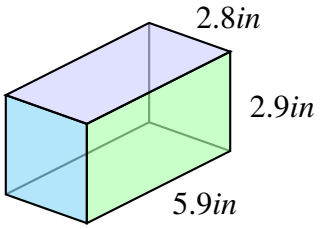

V: 5.9*in* x 2.8 x 2.9*in* = 47.908in^3

SA: 2 x (16.52 + 8.12 + 17.11)*in* = 83.5in^2

Volume and surface area of prisms (C)

Find the volume and surface area of each prism.

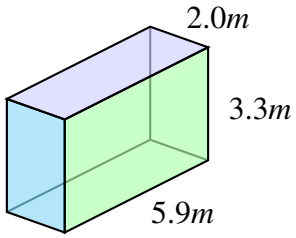

V: _____

SA: _____

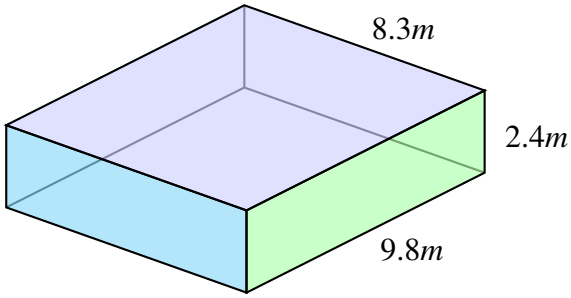

V: _____

SA: _____

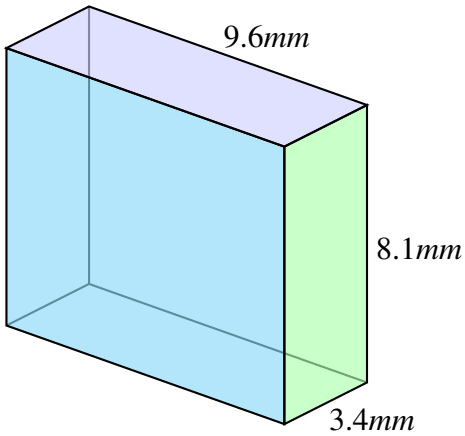

V: _____

SA: _____

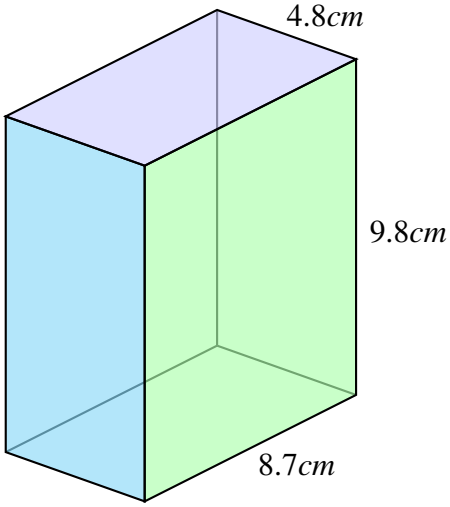

V: _____

SA: _____

Volume and surface area of prisms (C) Answers

Find the volume and surface area of each prism.

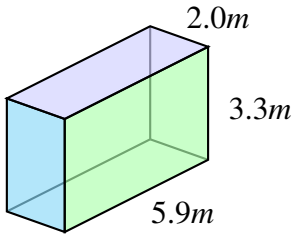

V: 5.9m x 2.0 x 3.3m = 38.94m^3

SA: 2 x (11.8 + 6.6 + 19.47)m = 75.74m^2

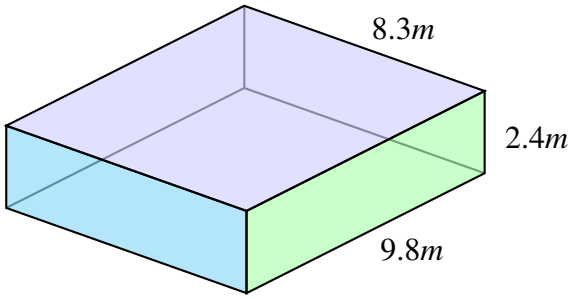

V: 9.8m x 8.3 x 2.4m = 195.216m^3

SA: 2 x (81.34 + 19.92 + 23.52)m = 249.56m^2

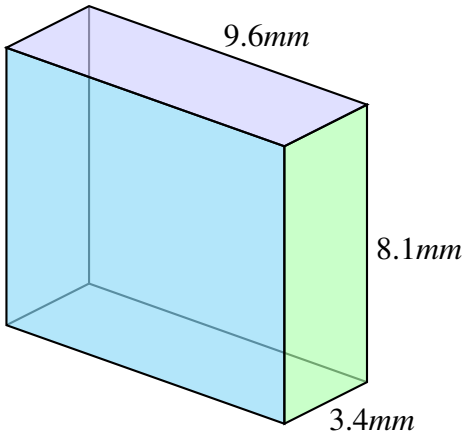

V: 3.4mm x 9.6 x 8.1mm = 264.384mm^3

SA: 2 x (32.64 + 77.76 + 27.54)mm = 275.88mm^2

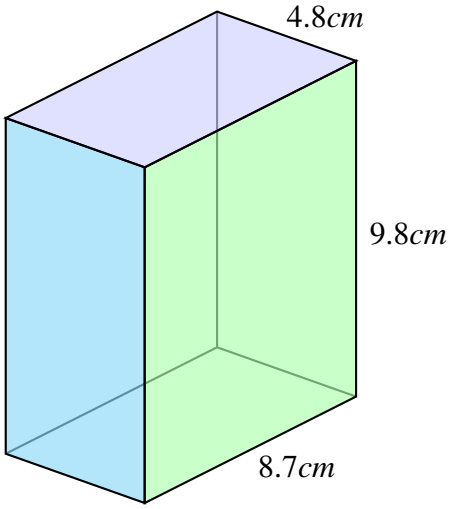

V: 8.7cm x 4.8 x 9.8cm = 409.248cm^3

SA: 2 x (41.76 + 47.04 + 85.26)cm = 348.12cm^2

Volume and surface area of prisms (D)

Find the volume and surface area of each prism.

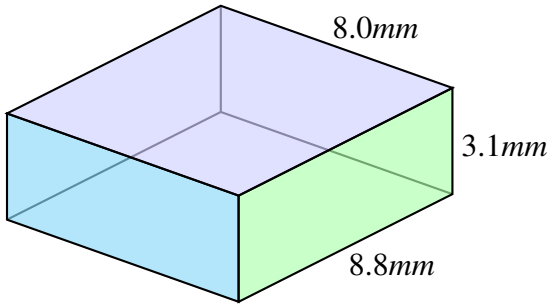

V: _____

SA: _____

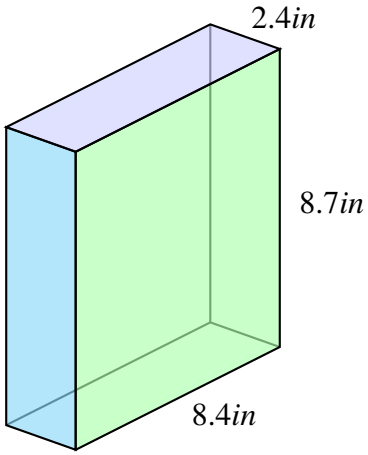

V: _____

SA: _____

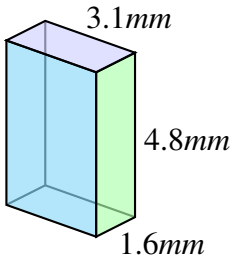

V: _____

SA: _____

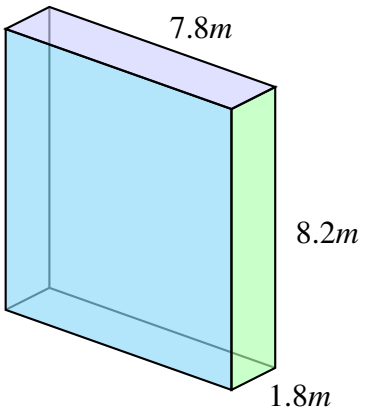

V: _____

SA: _____

Volume and surface area of prisms (D) Answers

Find the volume and surface area of each prism.

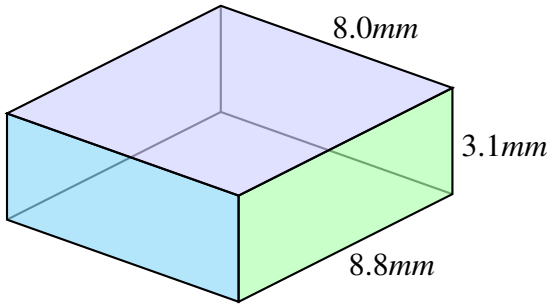

V: 8.8*mm* x 8.0 x 3.1*mm* = 218.24mm^3

SA: 2 x (70.4 + 24.8 + 27.28)*mm* = 244.96mm^2

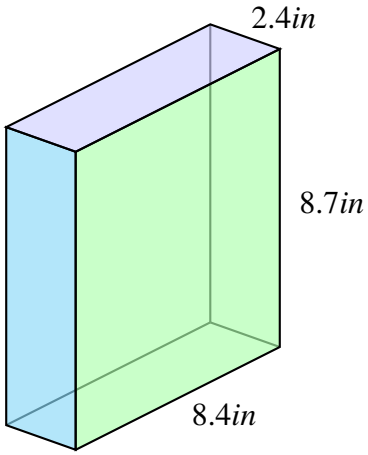

V: 8.4*in* x 2.4 x 8.7*in* = 175.392in^3

SA: 2 x (20.16 + 20.88 + 73.08)*in* = 228.24in^2

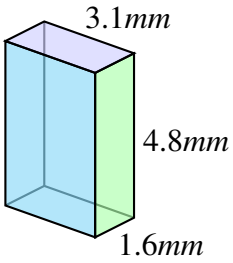

V: 1.6*mm* x 3.1 x 4.8*mm* = 23.808mm^3

SA: 2 x (4.96 + 14.88 + 7.68)*mm* = 55.04mm^2

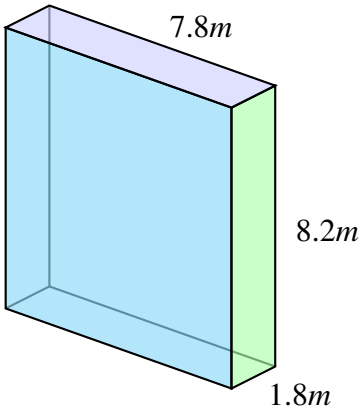

V: 1.8*m* x 7.8 x 8.2*m* = 115.128m^3

SA: 2 x (14.04 + 63.96 + 14.76)*m* = 185.52m^2

Volume and surface area of prisms (E)

Find the volume and surface area of each prism.

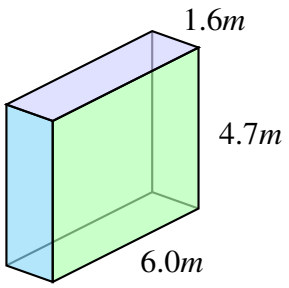

V: _____

SA: _____

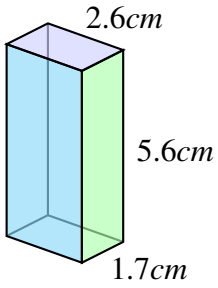

V: _____

SA: _____

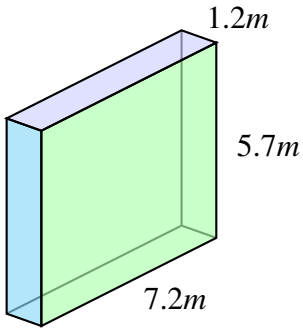

V: _____

SA: _____

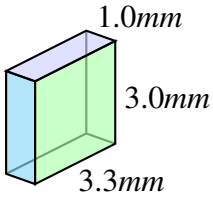

V: _____

SA: _____

Volume and surface area of prisms (E) Answers

Find the volume and surface area of each prism.

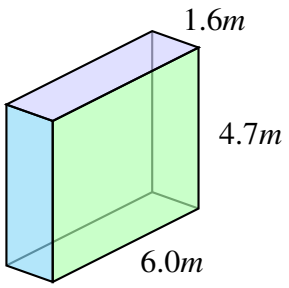

V: 6.0*m* x 1.6 x 4.7*m* = 45.12m^3

SA: 2 x (9.6 + 7.52 + 28.2)*m* = 90.64m^2

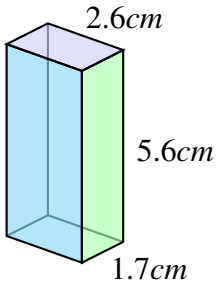

V: 1.7*cm* x 2.6 x 5.6*cm* = 24.752cm^3

SA: 2 x (4.42 + 14.56 + 9.52)*cm* = 57.0cm^2

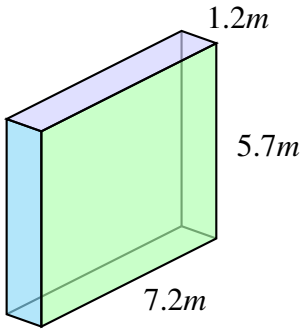

V: 7.2*m* x 1.2 x 5.7*m* = 49.248m^3

SA: 2 x (8.64 + 6.84 + 41.04)*m* = 113.04m^2

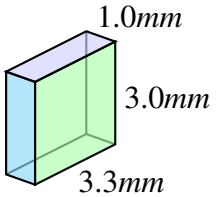

V: 3.3*mm* x 1.0 x 3.0*mm* = 9.9mm^3

SA: 2 x (3.3 + 3.0 + 9.9)*mm* = 32.4mm^2

Volume and surface area of prisms (F)

Find the volume and surface area of each prism.

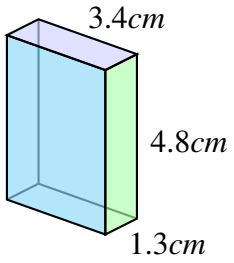

V: _____

SA: _____

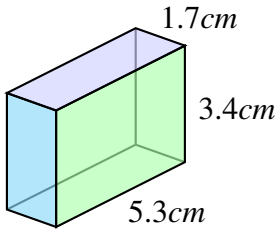

V: _____

SA: _____

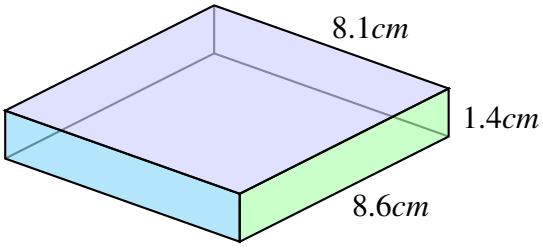

V: _____

SA: _____

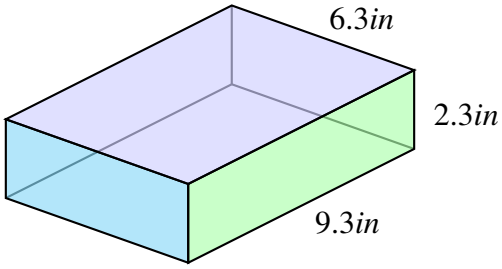

V: _____

SA: _____

Volume and surface area of prisms (F) Answers

Find the volume and surface area of each prism.

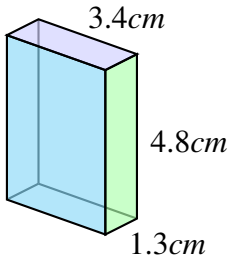

V: 1.3*cm* x 3.4 x 4.8*cm* = 21.216cm^3

SA: 2 x (4.42 + 16.32 + 6.24)*cm* = 53.96cm^2

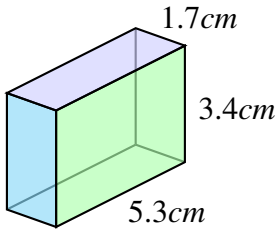

V: 5.3*cm* x 1.7 x 3.4*cm* = 30.634cm^3

SA: 2 x (9.01 + 5.78 + 18.02)*cm* = 65.62cm^2

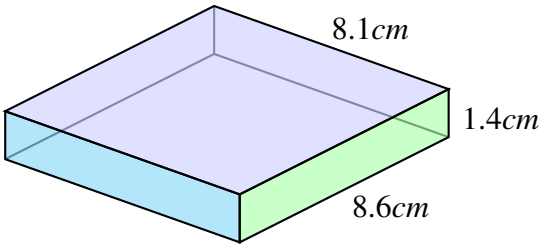

V: 8.6*cm* x 8.1 x 1.4*cm* = 97.524cm^3

SA: 2 x (69.66 + 11.34 + 12.04)*cm* = 186.08cm^2

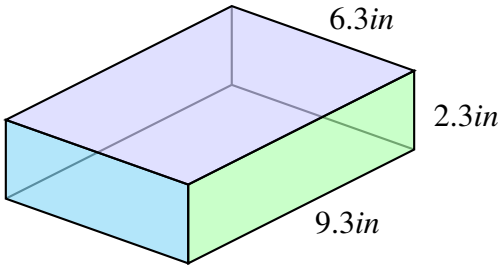

V: 9.3*in* x 6.3 x 2.3*in* = 134.757in^3

SA: 2 x (58.59 + 14.49 + 21.39)*in* = 188.94in^2

Volume and surface area of prisms (G)

Find the volume and surface area of each prism.

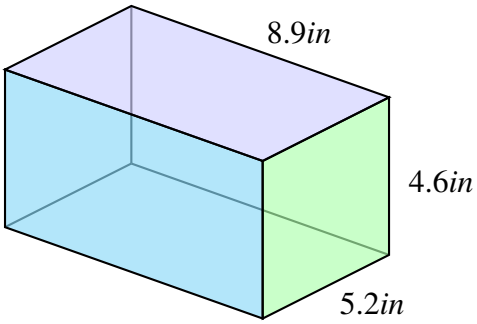

V: _____

SA: _____

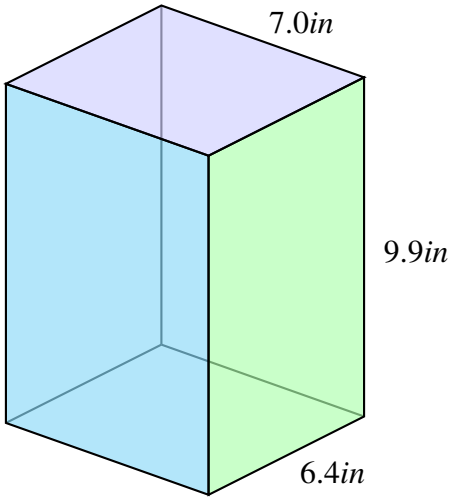

V: _____

SA: _____

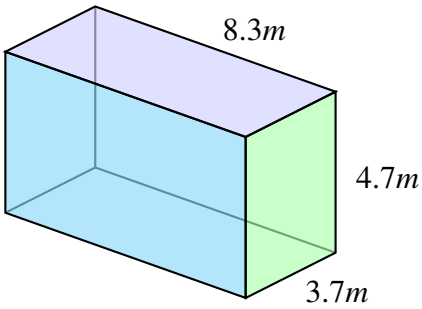

V: _____

SA: _____

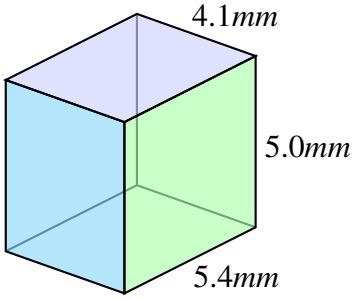

V: _____

SA: _____

Volume and surface area of prisms (G) Answers

Find the volume and surface area of each prism.

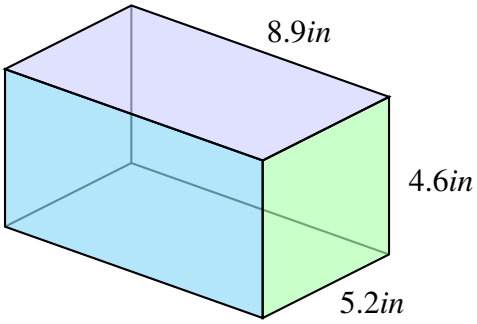

V: 5.2*in* x 8.9 x 4.6*in* = 212.888in^3

SA: 2 x (46.28 + 40.94 + 23.92)*in* = 222.28in^2

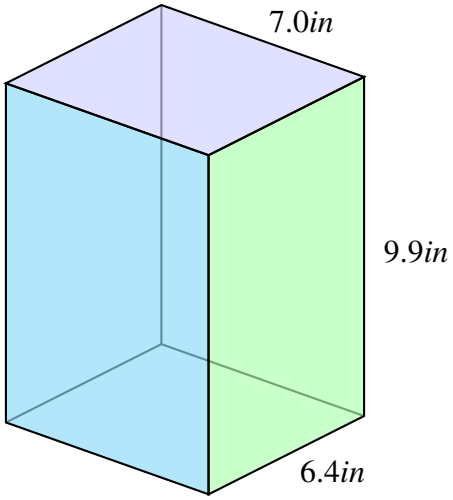

V: 6.4*in* x 7.0 x 9.9*in* = 443.52in^3

SA: 2 x (44.8 + 69.3 + 63.36)*in* = 354.92in^2

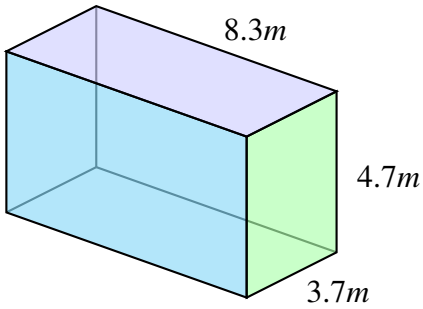

V: 3.7*m* x 8.3 x 4.7*m* = 144.337m^3

SA: 2 x (30.71 + 39.01 + 17.39)*m* = 174.22m^2

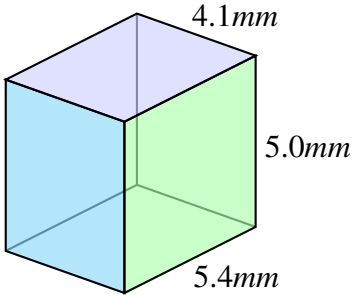

V: 5.4*mm* x 4.1 x 5.0*mm* = 110.7mm^3

SA: 2 x (22.14 + 20.5 + 27.0)*mm* = 139.28mm^2

Volume and surface area of prisms (H)

Find the volume and surface area of each prism.

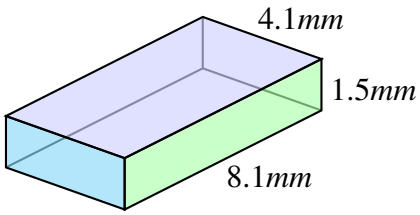

V: _____

SA: _____

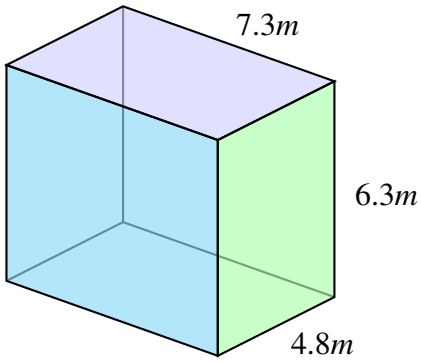

V: _____

SA: _____

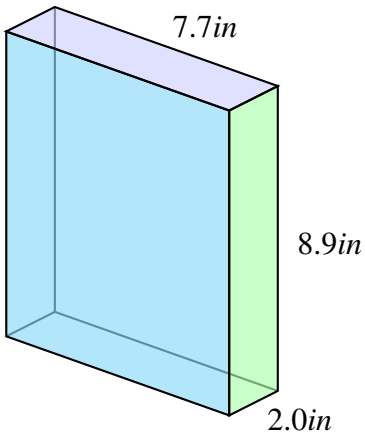

V: _____

SA: _____

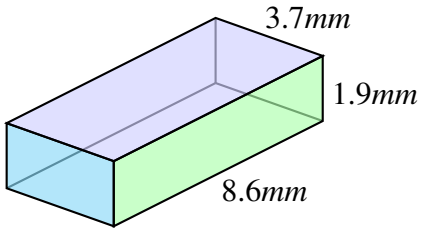

V: _____

SA: _____

Volume and surface area of prisms (H) Answers

Find the volume and surface area of each prism.

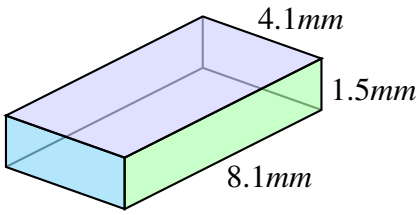

V: 8.1*mm* x 4.1 x 1.5*mm* = 49.815mm^3

SA: 2 x (33.21 + 6.15 + 12.15)*mm* = 103.02mm^2

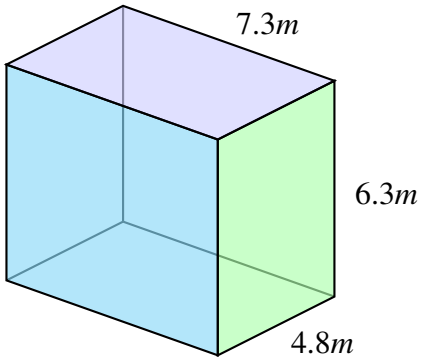

V: 4.8*m* x 7.3 x 6.3*m* = 220.752m^3

SA: 2 x (35.04 + 45.99 + 30.24)*m* = 222.54m^2

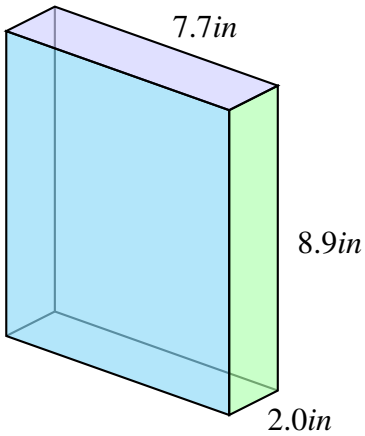

V: 2.0*in* x 7.7 x 8.9*in* = 137.06in^3

SA: 2 x (15.4 + 68.53 + 17.8)*in* = 203.46in^2

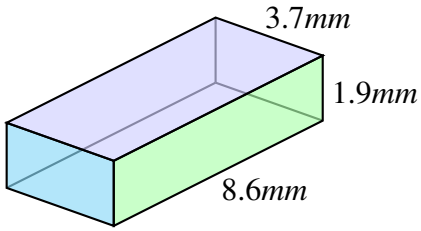

V: 8.6*mm* x 3.7 x 1.9*mm* = 60.458mm^3

SA: 2 x (31.82 + 7.03 + 16.34)*mm* = 110.38mm^2

Volume and surface area of prisms (I)

Find the volume and surface area of each prism.

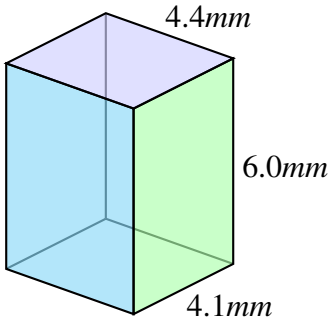

V: _____

SA: _____

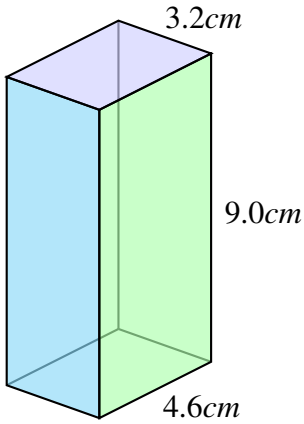

V: _____

SA: _____

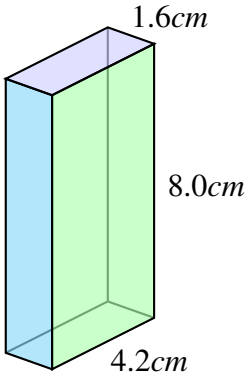

V: _____

SA: _____

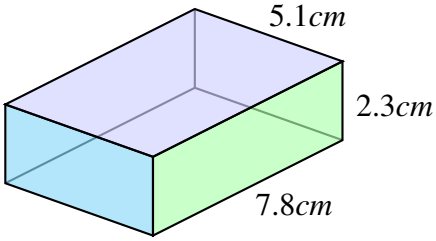

V: _____

SA: _____

Volume and surface area of prisms (I) Answers

Find the volume and surface area of each prism.

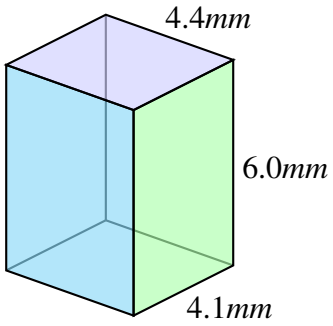

V: 4.1*mm* x 4.4 x 6.0*mm* = 108.24mm^3

SA: 2 x (18.04 + 26.4 + 24.6)*mm* = 138.08mm^2

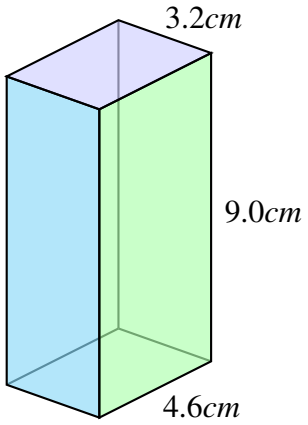

V: 4.6*cm* x 3.2 x 9.0*cm* = 132.48cm^3

SA: 2 x (14.72 + 28.8 + 41.4)*cm* = 169.84cm^2

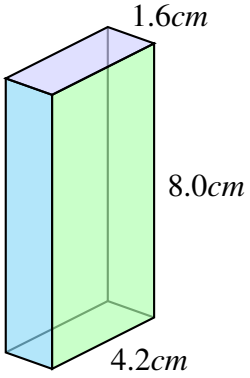

V: 4.2*cm* x 1.6 x 8.0*cm* = 53.76cm^3

SA: 2 x (6.72 + 12.8 + 33.6)*cm* = 106.24cm^2

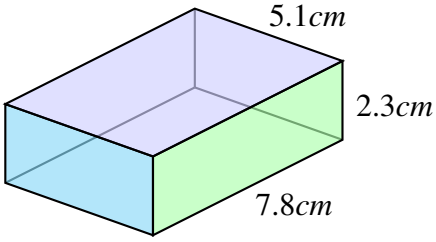

V: 7.8*cm* x 5.1 x 2.3*cm* = 91.494cm^3

SA: 2 x (39.78 + 11.73 + 17.94)*cm* = 138.9cm^2

Volume and surface area of prisms (J)

Find the volume and surface area of each prism.

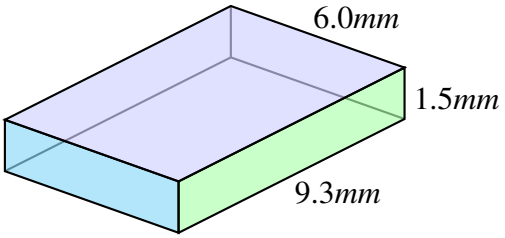

V: _____

SA: _____

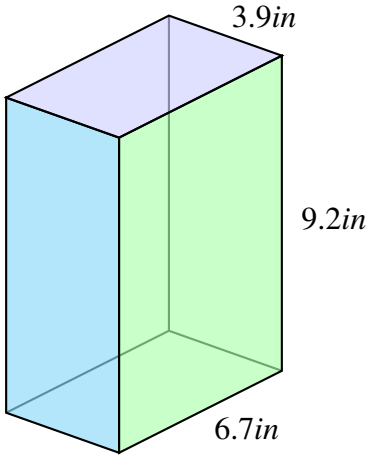

V: _____

SA: _____

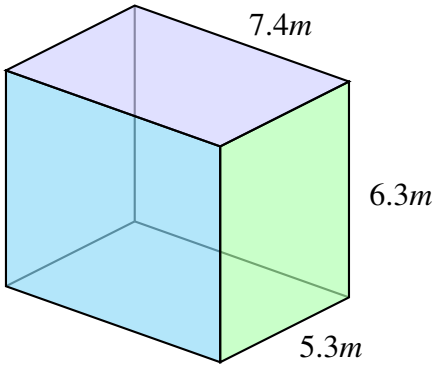

V: _____

SA: _____

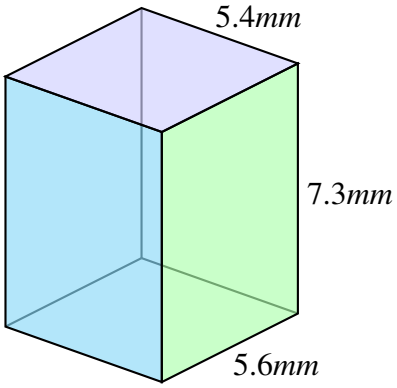

V: _____

SA: _____

Volume and surface area of prisms (J) Answers

Find the volume and surface area of each prism.

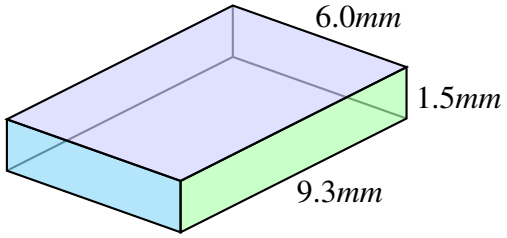

V: 9.3*mm* x 6.0 x 1.5*mm* = 83.7mm^3

SA: 2 x (55.8 + 9.0 + 13.95)*mm* = 157.5mm^2

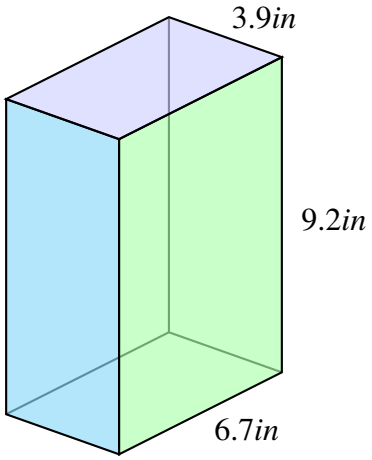

V: 6.7*in* x 3.9 x 9.2*in* = 240.396in^3

SA: 2 x (26.13 + 35.88 + 61.64)*in* = 247.3in^2

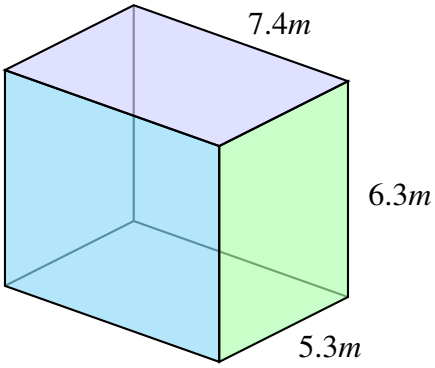

V: 5.3*m* x 7.4 x 6.3*m* = 247.086m^3

SA: 2 x (39.22 + 46.62 + 33.39)*m* = 238.46m^2

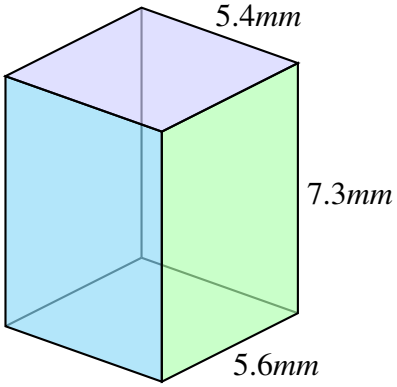

V: 5.6*mm* x 5.4 x 7.3*mm* = 220.752mm^3

SA: 2 x (30.24 + 39.42 + 40.88)*mm* = 221.08mm^2